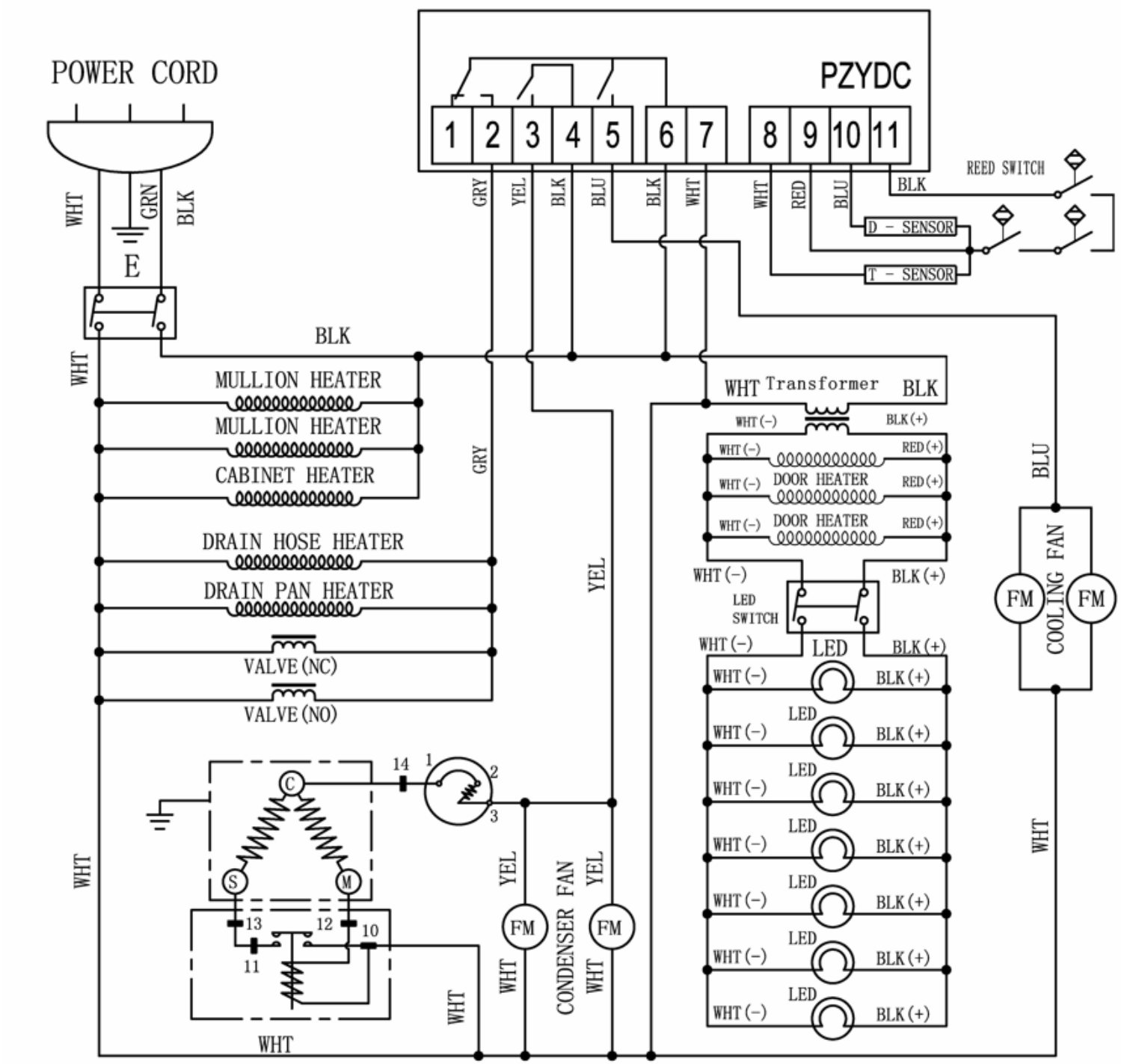
POWER CORD
PZYDC
1
2
3
4
5
6
7
8
9
10
11
REED SWITCH
D - SENSOR
T - SENSOR
WHT
GRN
BLK
E
GRY
YEL
BLU
RED
MULLION HEATER
MULLION HEATER
CABINET HEATER
DRAIN HOSE HEATER
DRAIN PAN HEATER
VALVE (NC)
VALVE (NO)
Transformer
WHT (-)
BLK (+)
RED (+)
DOOR HEATER
DOOR HEATER
LED SWITCH
LED
COOLING FAN
FM
CONDENSER FAN
C
S
M
14
1
2
3
13
12
10
11

TEFCOLD